70 1949 - 2019

ORMIG

Member of CISQ Federation

RINA

CERTIFIED MANAGEMENT SYSTEM
ISO 9001

55/60 iE

indoor ELECTRIC

Technical Features

Frame Structure formed by one box-type member only , for the complete frame width, with side parts at T shape in order to obtain the maximum bending and torsional stiffness.
It is connected by means of crosspieces in the front and rear part corresponding to the axles location.
Projected and manufactured by ORMIG from high quality steel.

Driving motor Electric motors at AC, 25 Kw power each, 96V.
Electronic control which allows for the steering on the crane axle.

Axles Rigid driving front axle, formed by two independent wheels units with electronic differential-gear.
- Steering rear axle, sideway double wheels, steering angle to 98° allowing the steering on the central axle. Each wheel unit is connected to the frame by means of two-rows balls bearing, in the upper position of the wheel. Air-hydraulic spring system providing springing, oscillation and locking with electronic control.

Tyres 4 wheels
- cushion 40 16 30
- twin wheels on front axle and 2 + 2 super-elastic tyres 355/50-20/10.0 at rear axle

Brakes In compliance with EEC regulations. Service brake at hydraulic control acting at front and rear wheels, with power-assisted pedal control.
Mechanical parking brake, spring-type acting in the front wheels by means of electric selector control.

Cab Steel structure. Wide visibility for the operator is provided.
It is complete with rearview mirrors, instrumentation, windshield-wipers, adjustable ergonomic seat.
The various mouvements are controlled by levers equipped with electric device against unexpected operations.

Electric system 96 V c.c. by means of lead accumulator, 1395 Ah capacity (about 8 hours operation) with 48 elements. 24 V. c.c. lighting through 96/24V converter. Separated battery charge.

Boom Fabricated from plate at high strength.
It is connected to the frame by means of rear supporting arms. Telescopic boom with a base section and two extensions at independent hydraulic extraction control. Extensions extraction by means of two double acting cylinders.
Derricking is provided through two double action cylinders.

Hydraulic system Fed by a variable delivery pump connected to the lectric motor, for derricking, boom extraction, winch or hydraulic fly-jib.
Electric motor at a.c., 34 Kw power, operating control by means of electronic unit.
Hydraulic oil tank capacity 340 litres

Electronic unit: Power control: by means of three separated electronic station, one fo reach electric motor, in interface position. MOSFET technology with starting self-diagnostic check and operations survey for prompt indications on the dashboard of eventual problems and type.
Should the breakdown be of danger for the operator or for the vehicle, the corresponding motion is cut out.
Each electronic station keeps in storage all eventual failures occured during the complete crane life
Crane control: by means of two electronic station which control all the crane functions and information fo the operator's through display at high resolution.

Safe load device Electronic - active type - with locking of the operations which can cause dangerous conditions.

Safety regulations The crane is equipped with all safety devices as per regulations in force. It complies with the requirements of Directive 2006/42/CE "Machine Directive" and to the EN 13000.
Structure according to regulation EN 13001.
Declaration of conformity "CE" is provided.

Weights: Standard crane:
total weight: 24.000 Kg
front axle : 11.500 Kg approx.
rear axle : 12.500 Kg approx.

Crane with counterweights:
total weight : 43.000 Kg
front axle : 8.500 Kg approx.
rear axle: 34.500 Kg approx.

Equipment on request
- special fly-jibs
- fix hook at boom top
- cab heater at fuel
- battery charge on the crane
- counterweights
- forks
- radio remote control

Din 15019.2 Lifting capacity chart (tonnes)

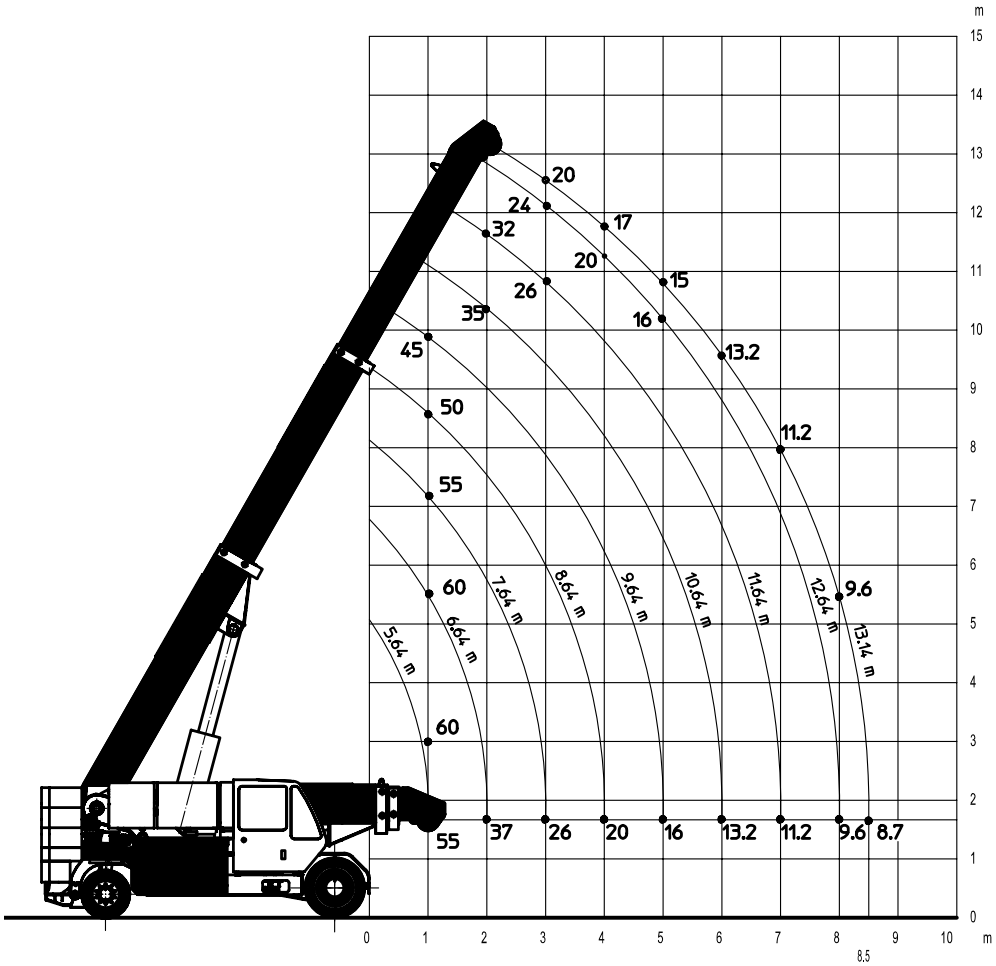

General Dimensions

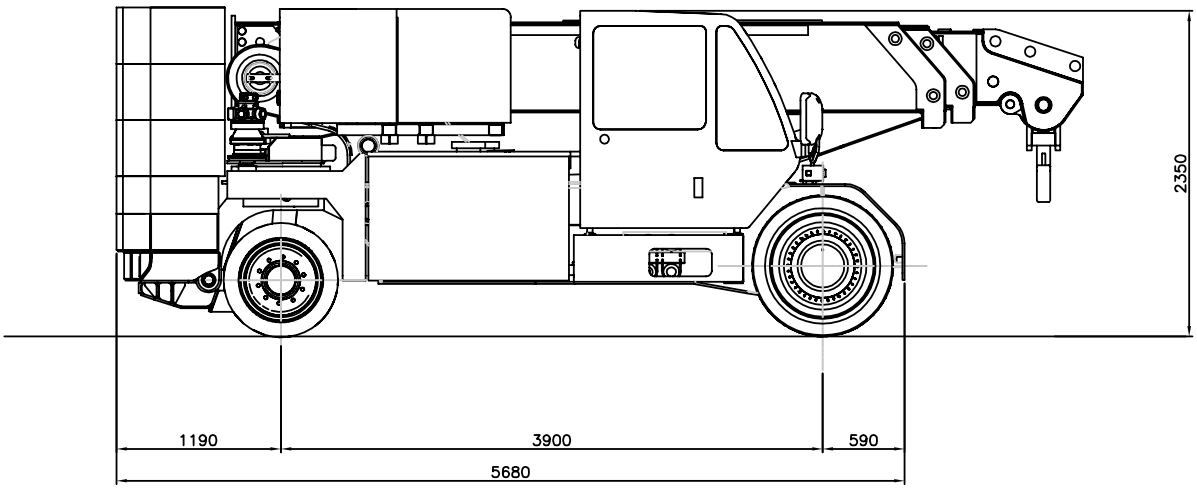

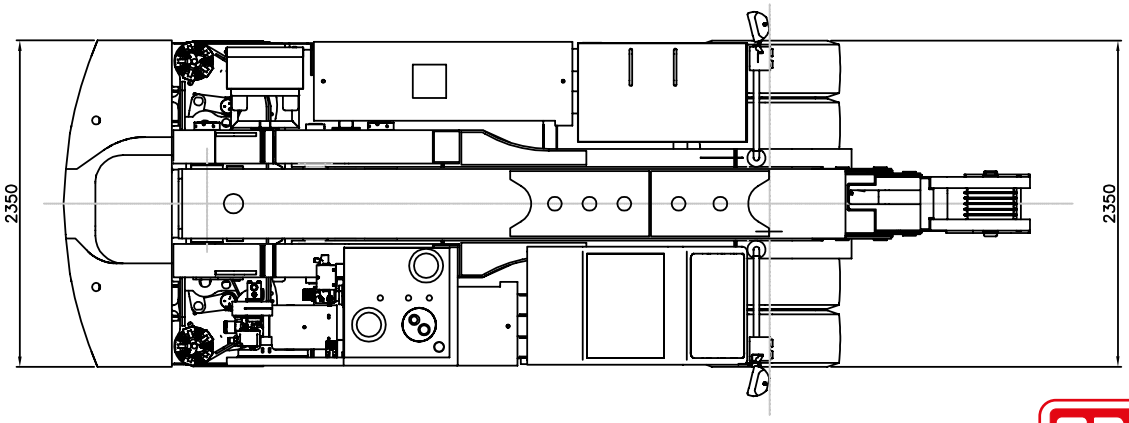

The steering radius is as limited as possible because the crane rotates on itself thanks to two slewing bearing units positioned in the rear wheels;
the hydro-pneumatic suspensions system assures a perfect distribution of the load on the rear wheels.
The accuracy of the steering is obtained by kinematic mechanism which is an Ormig patent.

IKRAN S.r.l.
Via Donatori di Sangue, 40/42
25020 San Paolo (BS) - ITALY
Tel: +39 030 9970501
info@ikran.eu | www.ikran.eu

ORMIG

The history of the lifting from 1949